eurofins | BioPharma Product Testing

Microbiological Cleaning Method Validation

"The purpose of cleaning procedures should never be to reduce bioburden to an acceptable level!"

Fergus O'Connell

QA Manager – Eurofins ams Laboratories

Purpose

"The purpose of cleaning procedures should never be to reduce bioburden to an acceptable level!"

Don't claim this in Cleaning Validation Policies or Protocols

If microbial bioburden were at an unacceptable level prior to cleaning - the last batch produced must therefore be contaminated!

Instead – the purpose is to control microbial bioburden within an acceptable level.

Cleaning of process equipment – Microbial issues

Note: cleaning of cleanroom surfaces & cleaning of process equipment – have distinct regulatory and technical focus.

Guidance on cleaning validation did not consider microbial issues at first – FDAs 1993 guidance* was limited to “equipment cleaning for chemical residues only”.

*In 1992 the FDA was criticised by a US Judge for being vague and ambiguous in their GMP expectations – “FDA versus Barr Laboratories”

The guidance did state that evidence was required that “routine cleaning and storage of equipment does not allow microbial proliferation”.

Control measures

Control measures in manufacturing may include limiting bioburden:

- In raw materials (and on equipment in direct contact with these).
- In packaging components
- In manufacturing environment
- On product-contact surfaces

Cleaning validation focuses on the latter!

Finished product characteristics may also be undesirable

Solid dosage forms - dried to very low water content

- eliminates probability of hydrolysis reactions

- Aw < 0.6 – won't support microbial growth

Factors hostile to microbes

Many factors in a typical cleaning process are hostile to microbes:

- High temperature (> 60 C)
- pH extremes (> 11.5)
- use of Sodium hypochlorite – oxidises soils (more water soluble residues) & a biocide.
- Use of surfactants – aids physical removal of bacteria from surfaces.

Sterility is not a requirement!

- Final rinses typically involve WFI or purified water

  - Neither is sterile.

Sanitizer

Use of a separate sanitizer

Common when using neutral pH cleaner at ambient temperature

- Most common – 70% IPA

Also reduces bioburden

- Final polishing rinse (further reduction of drug residues)
- Dries equipment (important for clean-hold times)

Disinfectant qualifications

- formally evaluates a products ability to reduce the levels of contaminant microorganisms on various surface types and components
  - Various surfaces (coupons) tested with various spiked organisms
  - Mode of application assessed
- are critical in assuring the microbial control of a manufacturing environment
- are not cleaning validations.

Note: Disinfectant label claims often based on extended contact times & surfaces which are easy to clean e.g. glass!

Cleaning validations:

- studies designed to measure a procedure's effectiveness at removing by-products, residual chemicals and bioburden.

Setting Limits

Setting bioburden limits:

This is a key point in any cleaning process

Setting limits for actives/cleaning agents – well established.

Same carryover principles can be applied to bioburden:

- Bioburden limit in next batch manufactured.
- Shared product contact area.
- Minimum batch size produced.

Limit for surface monitoring expressed as CFU/cm^2

Setting Limits

Important to consider:

Cleaned equipment (surfaces) will contribute only part of the bioburden in the next product.

Surface limit needs to be reduced by an additional factor!

E.g. raw materials are not of natural origin – factor of 0.1 typically used.

Example

20 ft^3 V-Blender Total product contact surface area = 50,000 cm^2	For 1000 CFU/gm in 500 kg batch
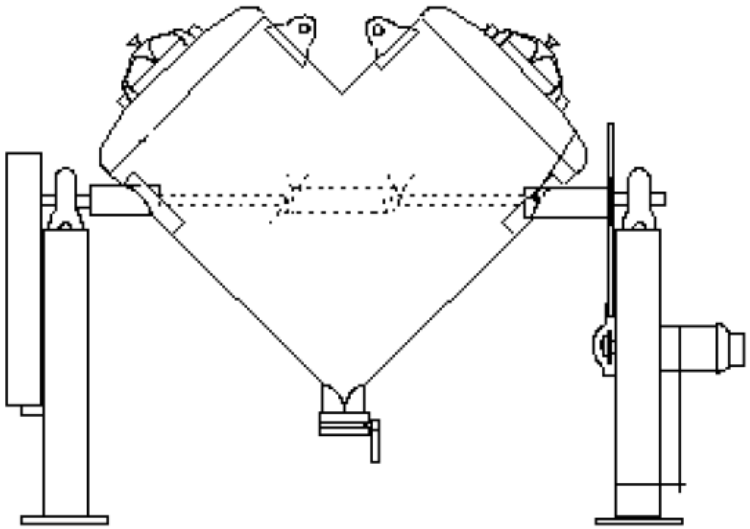	= 1000 CFU/gm X 500,000 gm = 5 X 10^8 CFUs 5 X 10^8 CFUs / 50,000 cm^2 = ***1 X 10^4 CFUs / cm^2*** or ***2.5 x 10^5 CFUs / 25 cm^2***

Batch size is large & CFU/gm limit is relatively large – this elevates the carryover limit.

To contaminate the batch >1000 CFU/gram – sizeable bioburden carryover required

Method is not appropriate for setting limits in this example
– provides a method to quantify risks!

Setting Limits

Even with smaller units:

- carryover limits usually > 50 CFU/cm^2 (> 1250 CFU/contact plate).

Carryover limit remains significantly above what can be:

- accurately enumerated
- achieved by a well designed cleaning process (e.g. using hot alkaline agents).

Most companies set lower limits lower – 1-2 CFU/cm^2 or 25-50 CFU/25cm^2.

VMP description – “industry standard practice”

Rinse sample carryover limits – typically above PFW limits of 100 CFU/mL

- For non-sterile manufacturing – limits typically set at 100 CFU/mL.

Setting Limits

Considerations for sterile manufacturing:

Is the level of bioburden important post cleaning?

- A lot of the equipment is steamed-in-place (SIPed)!

Limits set similar to non-sterile manufacturers.

- Levels of 1-2 CFU/cm^2 are achievable
- Gross bioburden not consistent with cGMPs.
    - SIP systems should address the bioburden at that level.

Note: the level and type of bioburden post cleaning and before steaming is important

<u>Endotoxins!</u>

SIPs control bioburden, not Endotoxins

Setting Limits

Calculated limits for product-contact surfaces can be *less* stringent than cleanroom environments!?

Limits set for process equipment – *true limits*.

- If exceeded, the cleaning fails. Equipment is not used.

Cleanroom environment limits (Annex 1 - Steriles) are recommended alert and action limits.

- If exceeded – investigation required but not an automatic fail.

Important: Comparison of bioburden levels should be done after the SIP process (if used) and not after the cleaning process.

- Then the bioburden limit of equipment is *more* stringent.

Clean-hold studies & Objectionable organisms

Equipment with incomplete cleaning and/or stored in a wet state:

- Proliferation is a risk for subsequent batch contamination.

Clean-hold studies may require:

- identification of organisms
- exclusion of objectionable organisms
    - based on product type

If no significant proliferation – little rationale for ID beyond that completed for initial cleaning study.

If significant proliferation occurs (failure of protocol) – identification is appropriate as part of an investigation.

Clean-hold studies & Objectionable organisms

Protocol for clean-hold study:

- Establish a goal and assess proliferation at the end – only.

Interval sampling to determine max hold-time:

- Potential to contaminate surfaces during swabbing or contact plate sampling.
- May result in false failures at later time-points.
- Rinse sampling – multiple time-points require multiple runs.

Multiple time-point studies

- complete in the design/development phase of validation

Dirty-hold time studies

If products contain a significant amount of water

- micro-organisms may grow and proliferate during this period.

Dirty-hold time studies

- mostly concerned with removing chemical residues
- any microorganisms would be subject to the same cleaning procedures.

Endotoxins

Endotoxins – if measured for cleaning validation (steriles), assess need to include in clean-hold studies.

Only an issue if significant microbial proliferation occurs.

Likely to fail:

- in the event of an associated bioburden failure.
- proliferation involves gram-negative organisms.

Sampling & Testing

Sampling and testing methods

- Membrane filtration – e.g. rinse samples
- Contact plates
- Swab sampling with desorption and pour/spread plate

Recovery from surfaces

- highly variable
- not very high typically

Averaging recovery across multiple sites for before and after cleaning studies is not a good practice

- Post clean-hold time sites should be *adjacent* to pre clean sites
    - Results from adjacent sites should be compared.

Sampling & Testing

Worst-case locations should be identified and selected for sampling.

Microbial enumeration is variable

USP/BP for non-sterile products: 10^2 CFU equates to < 200 CFU

Note: CFUs which may derive from a single or multiple cells.

Recovery studies comparable to chemical residues – difficult

- Spiking a surface and sampling – variable baseline bioburden
  - Drying reduces viable vegetative microorganisms
  - Recovery studies not typically performed
    - Risk-based rationale: carryover limits are much higher than in-house limits

Sampling & Testing

Exhaustive sampling may be an option:

Swab technique only

- Media transferred with contact plates.

A correction factor (based on % of total) applied to first swab.

Using bacterial spores:

- death on drying not an issue.

Species selection needs to be considered

- Are recoveries for all species equal?
- Is the recovery in a spore state equal to that in vegetative state?

Risk Assessment considerations

The expectation is a Science and Risk-based approach

API Manufacturing

Most pharma APIs - manufactured with organic solvents

Equipment cleaned with ‘Boil-outs’ and washes.

Most organic solvents will preclude microbial contamination from cleaning

- Antimicrobial properties

Biological APIs

Manufacture involves water

- Microbial proliferation is therefore a concern.

SIPs (or other processes) used after cleaning

- Controls microbial levels.

If an aqueous cleaning procedure used:

- Microbial growth & contamination may be of concern.
- Aqueous cleaners typically formulated with key ingredients (e.g. surfactants) to aid cleaning

  - ingredients may have some degree of bactericidal or bacteriostatic activity

Finished products:

For most – equipment cleaning is not followed by an SIP.

Various cleaning agents are used for removing residues of finished pharmaceuticals.

Cleaners based on the alkalis – one predominant group.

Alkalis

- destructive to microorganisms and
- can be considered bactericidal.

Most surfactants

- some degree of bactericidal or bacteriostatic activity, especially the cationic surfactants.

Cleaning agents

Complexing agents (e.g. EDTA):

- may also be used to help remove inorganic residues.

Strong oxidizers

- used to breakdown or destroy organic residues and these compounds
- strong antimicrobial properties

Types of Cleaning Agents	Use	Examples
Alkali-based	Fatty-type soils, protein deposits	NaOH, KOH
Acid-based	Dissolving mineral salts, removing scale	HCl, HNO_3, H_3PO_4, Citric Acid
Surfactants	Wetting, Suspending Dispersion, Emulsifying	Sodium Dodecyl Benzene Sulphate, Sodium Lauryl Sulphate
Complexing Agents	Prevent deposition from scale ions	EDTA, Nitrilotriacetic acid
Oxidizers	Removing organic residues	Sodium Hypochlorite, Hydrogen Peroxide

Water only

Some facilities use water alone

Rationale:

the product constituents are water-soluble

- Therefore water is sufficient for adequate cleaning.

Ignores the poor ‘wetting’ properties of water itself

- can lead to incomplete cleaning
- the accumulation of residues/bioburden on equipment

The practice that should be avoided.

Conclusion

Cleaning validation protocols should include microbiological considerations.

Examples:

- All potential bioburden sources – raw materials, equipment etc
- Limits should be set with the rationale/risks documented
- The antimicrobial properties of cleaning agents should be considered
- Bioburden types present post-cleaning should be understood if likely to present additional challenges later e.g. Gram negatives - endotoxins.
- Equipment design should be assessed for microbiological cleaning and drying purposes before storage.

References

Cleaning and Cleaning Validation: Microbiological Aspects

QP Solutions - http://qp.solutions/cleaning-validation/cleaning-cleaning-validation-microbiological-aspects/

Microbial Aspects in Cleaning Validation

Microbiology and Sterility Assurance in Pharmaceutical Industry, Edition: 2011, Chapter: 9, Publisher: Business Horizons, Editors: Madhu Raju Saghee (Author, Tim Sandle (Author, Edward C. Tidswell, pp.1-14

https://www.researchgate.net/publication/285600907_Microbial_Aspects_in_Cleaning_Validation

Cleaning Validation in the Pharmaceutical Industry

http://www.ivtnetwork.com/sites/default/files/Cleaning%20Validation%20in%20the%20Pharmaceutical%20Industry_0.pdf

Sampling in cleaning validation in Pharmaceutical Industry

http://www.pharmaguideline.com/2017/06/sampling-cleaning-validation.html

References

Cleaning Validation in the Pharmaceutical Industry

http://www.ivtnetwork.com/sites/default/files/Cleaning%20Validation%20in%20the%20Pharmaceutical%20Industry_0.pdf

Sampling in cleaning validation in Pharmaceutical Industry

http://www.pharmaguideline.com/2017/06/sampling-cleaning-validation.html

FDA - GUIDE TO INSPECTIONS VALIDATION OF CLEANING PROCESSES

(reference material for investigators and other FDA personnel)

https://www.fda.gov/iceci/inspections/inspectionguides/ucm074922.htm

Cleaning Processes and Microbial Controls

Rebecca A. Brewer

Director, Consultancy Services,

Validation & GMP Compliance

Dober

https://www.pda.org/docs/default-source/website-document-library/chapters/presentations/metro/cleaning-processes-and-microbial-controls.pdf?sfvrsn=8

References

Microbiological Issues in Process Equipment

Cleaning Validation Part I: Basic Issues - Destin LeBlanc

Pharmaceutical Microbiology Forum Newsletter – Vol. 15 (10), October 2009.

Microbiological Issues in Process Equipment

Cleaning Validation Part II: Clean Hold Times - Destin LeBlanc

Pharmaceutical Microbiology Forum Newsletter – Vol. 15 (12), December 2009.